| Rev No. | Description | Date | Name |
|---|---|---|---|
| A | New Assembly | 22/04/08 | N. Santini |
| B | Redesign | 30/09/08 | N. Santini |
| | | | |

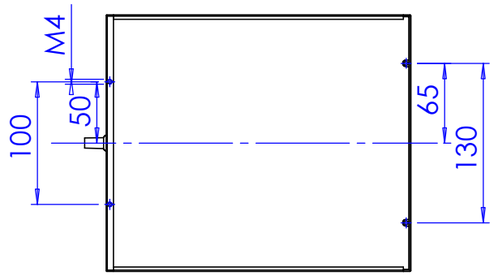


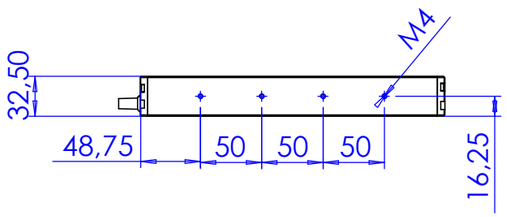


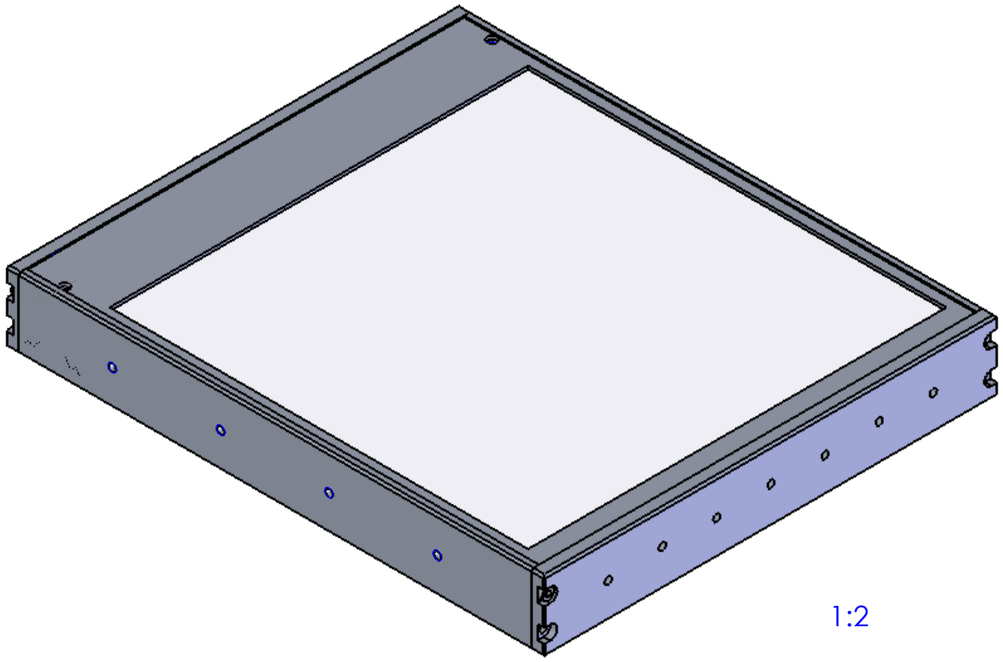

1:2

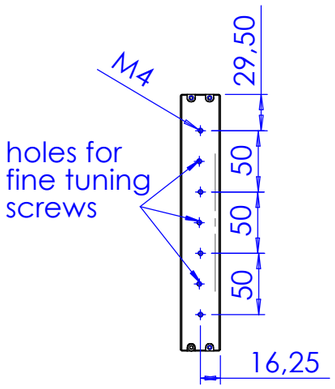


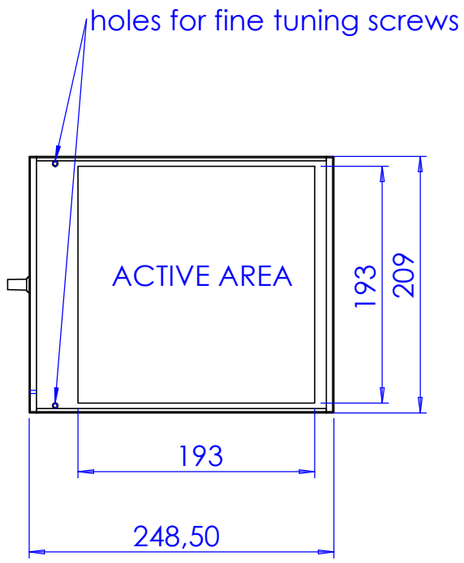


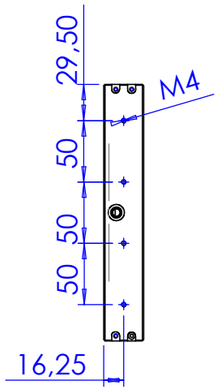


| | | | |
|---|---|---|---|
| Material: N.A | | Mass: 1010 g | Scale: 1:5 |
| Surface treatment: N.A. | | Project-Prod.item/Instrument: LTBK192 | |
| Geometrical tolerance (ISO 2768-2) Class K | Undimensioned bevels: 1x45° | Description: Layout | |
| Linear tolerance (ISO 2768-2) Class m | Undimensioned radii: R 0.5 | | |

| 0.5 ÷3 | >3÷ 6 | >6÷ 30 | >30÷ 120 | >120 ÷400 | >400÷ 1000 | >1000 ÷2000 | >2000 ÷4000 |
|---|---|---|---|---|---|---|---|
| ±0.1 | ±0.1 | ±0.2 | ±0.3 | ±0.5 | ±0.8 | ±1.2 | ±2 |

| | Date | Name |
|---|---|---|
| Designed | 22/04/08 | N. Santini |
| Draw | 30/09/08 | N. Santini |
| Checked | X | C.Sedazzari |

Drawing No.: XXXXXXXXX

Sheet: 1/1

Reproduction forbidden without specific authorization

www.opto-engineering.com

OPTO ENGINEERING S.r.l. - 46100 Mantova Italy - Via Cremona, 29/2 - Tel. +39 0376 263565 - e-mai: info@opto-engineering.com - http://www.opto-engineering.com